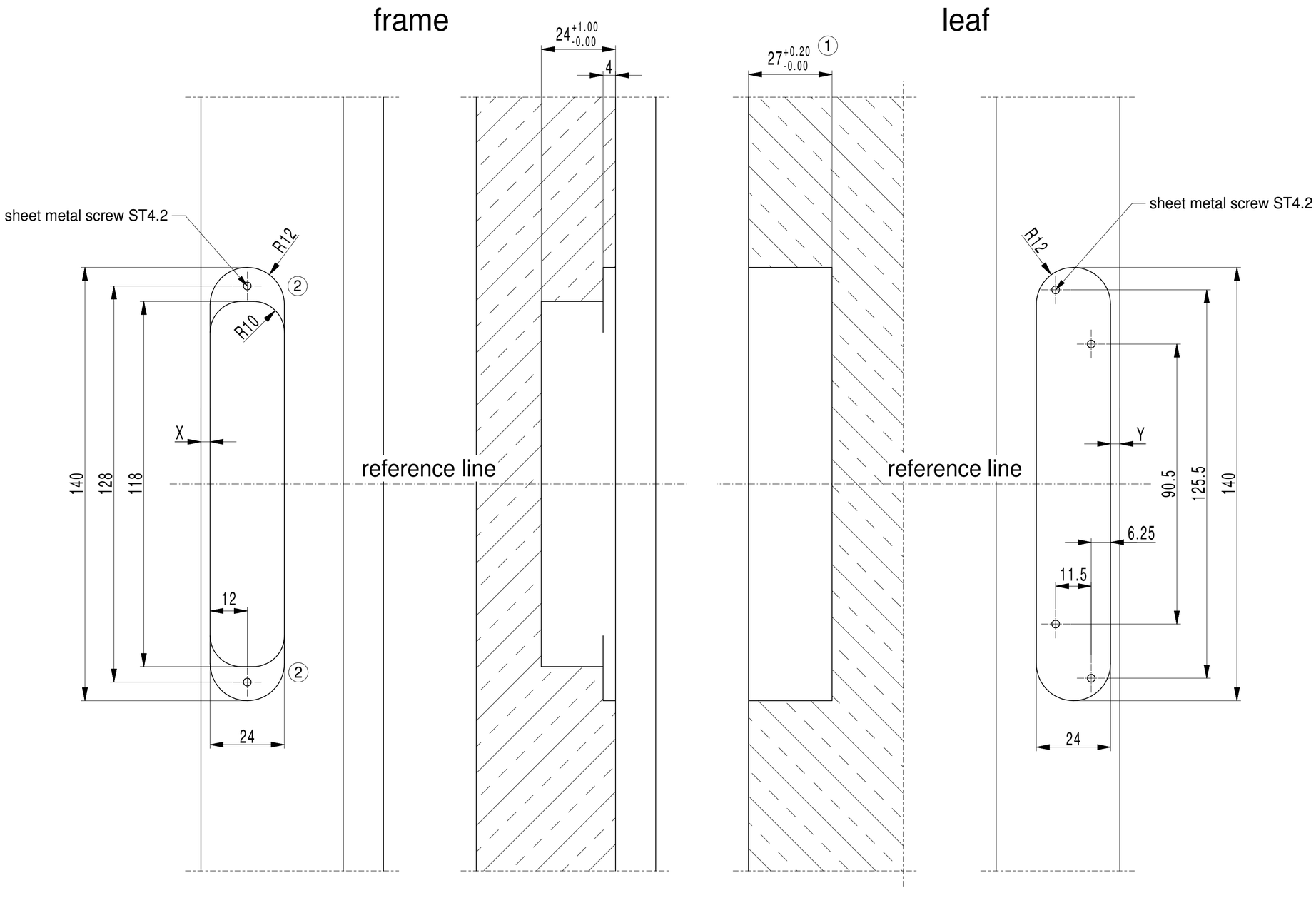

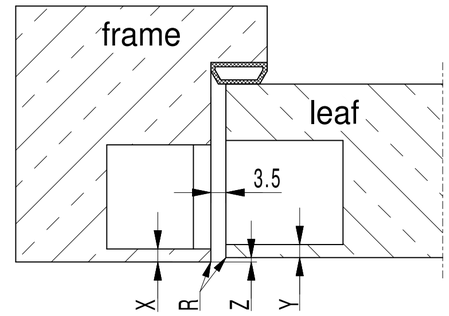

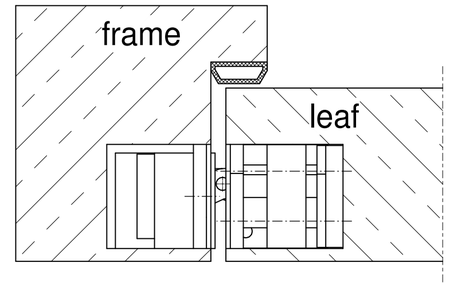

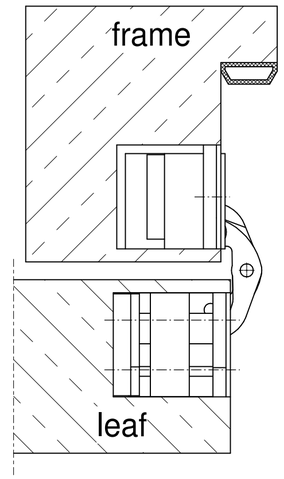

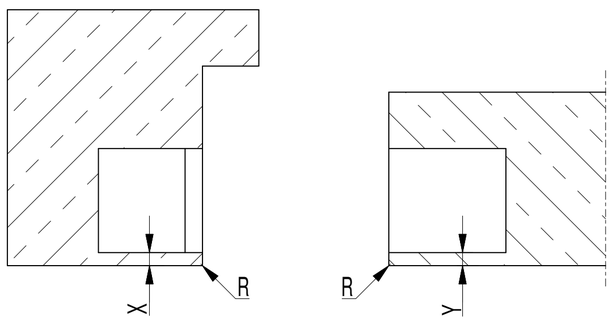

cutout ratio

frame (X)	leaf (Y)	distance (Z)	radius (R)
3 mm	3 mm	0 mm	1 mm
4 mm	3 mm	1 mm	3 mm

Please note that the cutout ratios become more unfavourable downward in the table with the effect of reducing the adjustability of the hinge.

Ideal case: door recess 3 mm, frame recess also 3 mm (underlined). A big radius at the door and frame is recommendable.

This drawing is our property. Any duplication, use or distribution to third parties is strictly prohibited and constitutes an infringement of copyright which will be subject to legal proceedings and compensation claims. (Copyright Law, Act against Unfair Competition, BGB). All rights reserved in case of a patent issue (§ 7 sect. 1 PatG) or a utility model protection (§ 5 sect.4 GebrMG). BaSys - Bartels Systembeschläge GmbH

Index	Änderung / Description of Change	Datum / Date	Name
2	hole removed	20.01.12	Reg
1	25 in 27 mm	13.10.11	Gl.

Maße / Dimensions in mm		
Format	A2	
Werkstoff / Material	-	
	2011	Datum / Date
gez. / drawn	23.08.	Glück
gepr./checked	-	-
Norm / std.	-	-
Datei / File	03992900.PRT	

BaSys Bartels Systembeschläge GmbH
Bartels Systembeschläge GmbH
Gewerbegebiet Echternhagen 2
D-32689 Kalletal-Hohenhausen
Tel.: +49 (0) 52 64 / 64 73 - 0
Fax: +49 (0) 52 64 / 64 73 - 30

Benennung / Title

cutout drawing

PIVOTA ® DX 38 3-D "CP"

Zeichn.-Nr. / Drawing-No. -

Maßstab / Scale 1 : 1